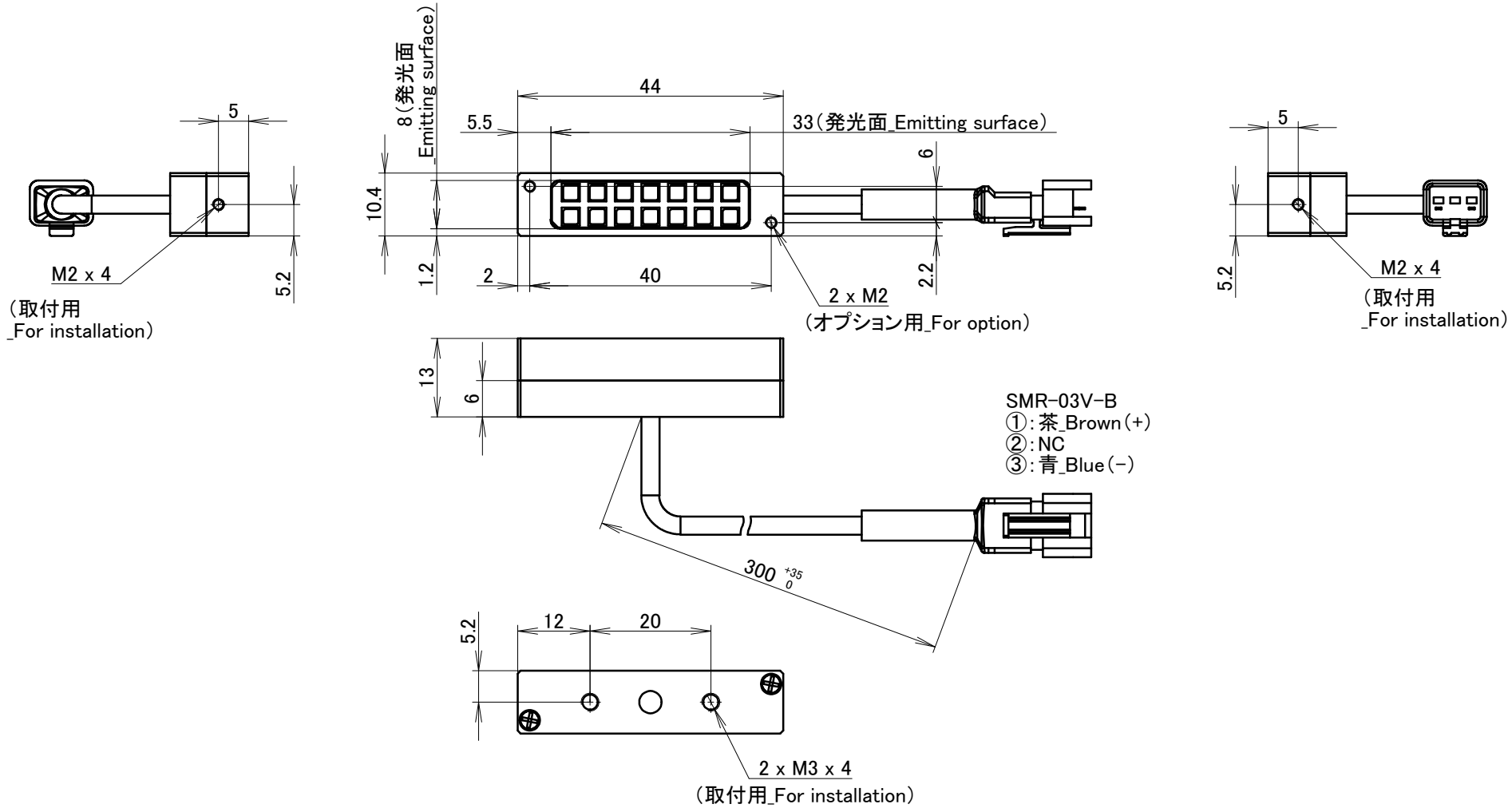

入力電圧_Input Voltage：DC 24V
消費電力_Power Consumption：1.4W

UNIT:mm

REVISION	DATE	DESCRIPTION	REVISED
000			

ISSUE DATE	SCALE	APPROVED	NAME
2024/09/24	1:1	D.OSHIMA	LDL2-33X8GR2
	SHEET SIZE	CHECKED	DRAWING NAME
	A4	Y.NAKAJIMA	外観図_Outline
		DESIGNED	
	PROJECTION	K.NAGATA	DRAWING No. / REVISION / SHEET
CCS Inc.		DRAWN K.NAGATA	UA45392-G / 000 / 01/01